PROTEKT®

INSTRUCTIONS FOR USE AND ASSEMBLY
Read this manual carefully before use

TM 15

SAFETY TRIPOD
EN 795/B TS 16415/B

1

2

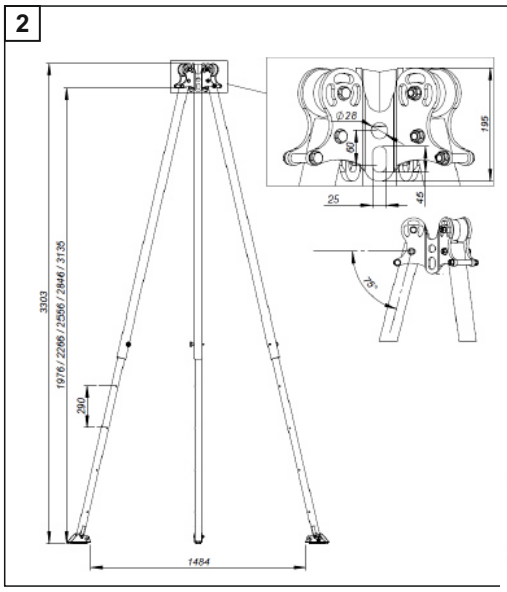

3

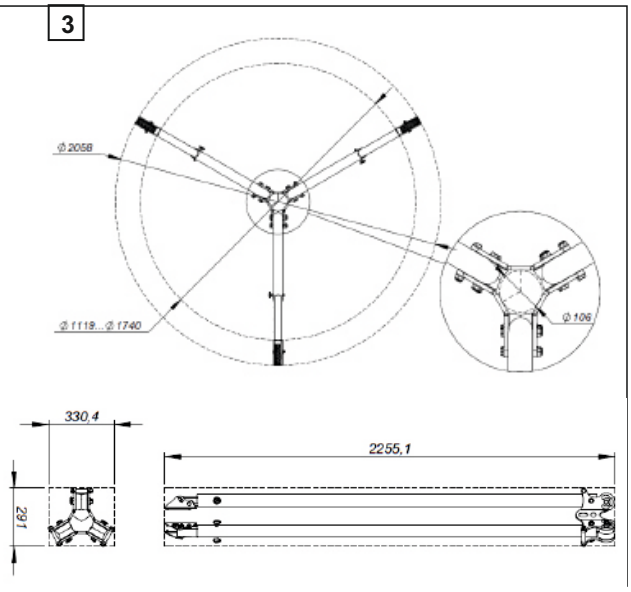

4

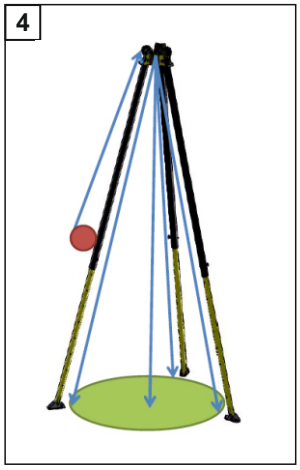

5

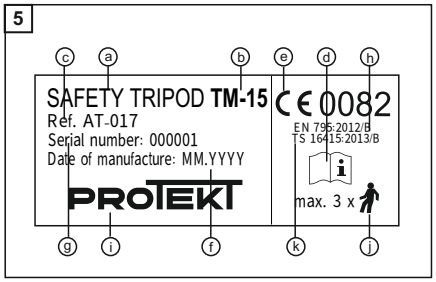

6

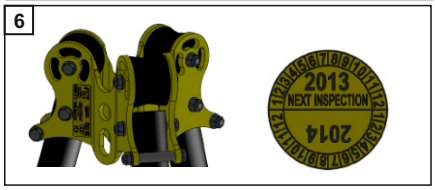

9.a

9.b

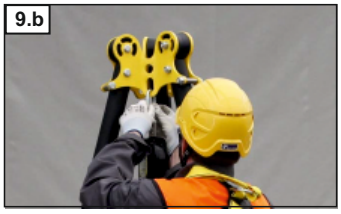

9.c

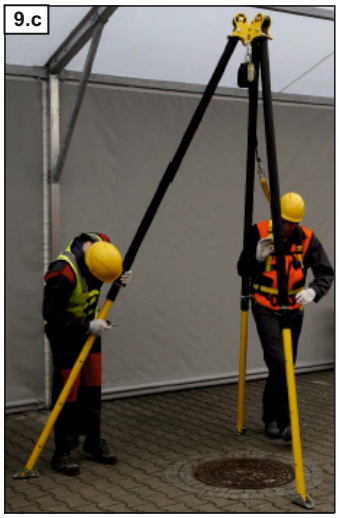

9.d

9.e

9.f

9.g

9.h

10.a

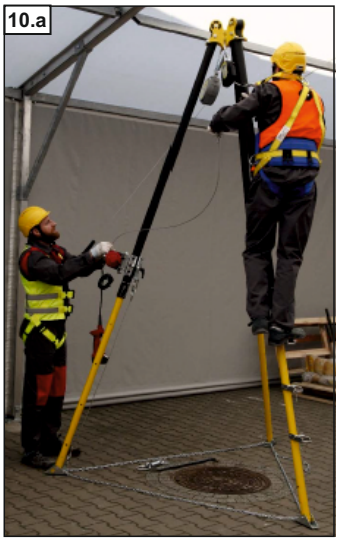

10.b

10.c

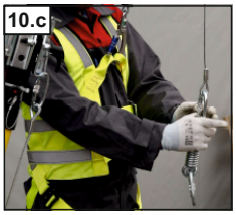

11

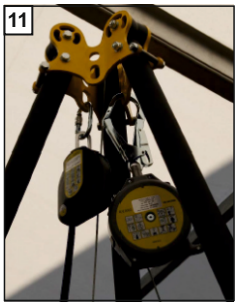

ed. 4/05.04.2024
0000356

Fig. 1. General view of the device
Fig. 2. Overall dimensions of the unit – front view/transport dimensions
Fig. 3. Overall dimensions of the unit – bottom view
Fig. 4. Permissible load directions of the anchor point in the internal area defined by the legs of the device
Fig. 5. Device label
Fig. 6. Location of marking / inspection sticker

1. OVERALL DIMENSIONS

2. GENERAL DESCRIPTION
The safety tripod is an anchor point complying with EN795/B and TS16415/B document
and can be used as a component of fall protection equipment. The tripod ensures protection of up to 3 persons simultaneously. When using the device for evacuation of persons, loads must not be lifted at the same time. The tripod consists of a powder-coated aluminium head equipped with 3 polyamide bearing rollers (to guide the working rope of the CRW/RUP series of escape equipment). The head is equipped with 3 anchor points located on the sides of it. Each of these points can serve as an anchor point for fall protection equipment. Each of the available anchor points can be used by up to three people at a time.
The aforementioned escape devices can be attached to each of the three aluminium telescopic legs using the UTB universal bracket (AT017-300). Each telescopic leg ends in a composite foot with a rubber pad. Each foot is equipped with teeth that, when properly rotated relative to the foot, penetrate loose or slippery ground (earth, sand, gravel, ice, snow). The inner leg is locked in the outer leg with a locking pin
with locking fins that are released by pressing a button in the pin holder.
Basic specifications of the equipment:
· Maximum height under the head: 3.13 m
· Minimum height under the head: 1.97 m
· The range of diameters over which the tripod can be set up: 1.1 — 1.7m

3. WORKING LOAD AND STRENGTH
a) GENERAL INFORMATION
Minimum Breaking Strength (MBS): 21 kN.
The equipment can be loaded with working force in a vertical downward direction in the space bounded by the legs of it.
If the device is used as part of a fall arrest device, the user must be equipped with an element that limits the maximum dynamic forces acting on him/her during fall arrest to a maximum of 6 kN. Maximum load that the device can transfer to the structure during operation is 10 kN.
b) FOR PERSONAL PROTECTION EQUIPMENT (PPE) attached to anchor points located on the head:
Maximum of 3 people simultaneously connected to one anchor point.
In accordance with the requirements of EN795/B and the TS16415/B document, the strength of the device is min. 14 kN for each anchor point.
c) FOR PERSONAL ESCAPE EQUIPMENT installed on a tripod leg using a UTB carrier (AT017-300):
Working Load Limit (WLL): 200 kg
Safety factor (SF): 10:1.
The working load of the escape device used must not exceed 200 kg.
d) IN HEIGHT RESPONSE
with a pulley system with a ratio (e.g. 4:1) attached to one of the available anchor points on the head.
Maximum of 3 people simultaneously connected to one anchor point.
In accordance with the requirements of EN795/B and the TS16415/B document, the strength of the device is min. 14 kN for each anchor point.

4. TRANSPORT AND WEIGHT
Weight of complete unit: 28.7 kg.
Carry/transport the PPE in a packaging which protects it from damage and moisture, e.g. water-proofed bags or in steel or plastic cases.

5. MAINTENANCE AND STORAGE
Personal protective equipment must be cleaned and disinfected so as not to damage the material (raw material) from which the device is made. For textile fibre materials (lanyards, belts, straps, and ropes), use gentle detergents intended for textiles.. Cleaning can be done by hand or by machine washing. It should be rinsed thoroughly. Plastic parts shall be cleaned with water only. If soaked during cleaning or
in use, the equipment should be thoroughly dried in open air, away from heat sources. Metal parts and mechanisms (springs, hinges, latches, etc.) can be lightly lubricated ocassionally,
in order to improve their performance.
Store the PPE loosely packed, in well-ventilated, dry areas, and away from sunlight, UV radiation, dust, sharp objects, extreme temperatures and corrosive chemicals.

6. SERVICE LIFE
There is no set permissible service life provided that periodic inspections are carried out on time. The device must not be used without the periodic inspections recorded in the operation sheet.
NOTE: The maximum service life depends on the intensity of use and operating environment. Use of the equipment in harsh conditions, in frequent contact with water, sharp edges, corrosive substances, at extreme temperatures may require it to be taken out of service even after one use.

7. PERIODIC INSPECTIONS
At least after every 12 months of operation – starting from the date of first use – a periodic inspection of the device shall be performed. The periodic inspection shall only be carried out by a competent individual who is experienced and trained in the periodic inspection of personal protective equipment. The operating conditions may affect the frequency of periodic maintenance, which can be carried out more frequently than every 12 month of operation. Each periodic inspection shall be recorded in the fall arrester's service log.
After 5 years of use, it is recommended that periodic inspections are carried out by the equipment manufacturer or a company authorised by the manufacturer to carry out such inspections.

8. MARKING OF THE DEVICE
Marking elements:
a) Name/type of equipment.
b) Designation of the equipment model.
c) Part number.
d) Number/year/class of European standard.
e) CE marking and number of the notified body supervising the production of the equipment.
f) Month and year of manufacture.
g) Serial number.
h) Caution: read the instructions for use.
i) Designation of the manufacturer or distributor.
j) Maximum number of simultaneous users
k) Technical specifications for the use of the device by more than one person at a time.

Place an inspection sticker next to the label and mark the month and year of the next periodic inspection. Do not use the equipment after this date. Note: Before the first use, mark the date of the next inspection (date of first use + 12 months, e.g. first use 01.2023 – mark 01.2024). The “inspection sticker" affixed next to the identification feature.

9. TRIPOD INSTALLATION
It is recommended that at least two people install the tripod.
a) Place the tripod vertically in its lowest position on a flat, stable and firm surface that will carry the working load. The legs should be tilted outwards as much as possible. The tripod should be positioned over the hole so that the working rope is roughly in the centre of the hole.
b) Optionally, attach the retractable type fall arrester to the head's side hitch.
b) Extend the tripod legs to the desired length. Adjust the length of the legs so that the head is in the horizontal plane. Legs must always be the same length. Lock each leg with a locking pin.
d) The automatic pin is equipped with fins that are unlocked by a button in the handle. The pin must be fully inserted so that the fins are correctly locked.
e) Correctly locked automatic pin.
f) Secure the tripod legs against accidental separation using a chain (supplied with the tripod). Connect the ends of the chain with a snap hook. The chain should be pulled tight between the legs. A special strap can be used instead of the chain.
g) Optionally, the AT013-300 steps can be installed to allow easy access to the head of the unit when installing the working rope. The steps are installed with a pin in the adjustment holes of the inner leg.
h) A minimum of 4 AT013-300 stages is recommended for the tripod.
i) To fold the tripod, remove the steps, remove the pins and fold the legs.

10. INSTALLATION OF THE WORKING ROPE OF THE TRIPOD-MOUNTED DEVICE
a) When installing the working rope on the tripod head, it is possible to climb the tripod leg using the AT013-300 steps. The use of an additional safety device in the form of a retractable type fall arrester is recommended when using the steps.
b) Pull the appropriate piece of rope out of the device and place it on the roller built into the head. Check that the working rope sits well on the roller.
c) The rope end of the RUP series evacuation devices must be fitted with an SDW energy absorber.

11. INSTALLATION OF PERSONAL PROTECTIVE EQUIPMENT
Personal protective equipment such as CR/WR series retractable type fall arresters can be connected to the anchor points located on the side plates of the head.

12. INSTALLATION OF THE UTB (AT017-300) UNIVERSAL HOLDER
See: UTB user manual.

13. INSTALLATION OF ESCAPE DEVICES
See: UTB user manual.

14. MAIN PRINCIPLES OF PERSONAL PROTECTIVE EQUIPMENT (PPE) AGAINST FALLS FROM A HEIGHT
· The use of attachment point must be in accordance with the individual equipment use instructions and standards:
EN 361 – full body harness
EN 352-3; EN 355; EN 360 – protection equipment
EN362 – connectors
EN 795 / TS16415 – anchor points
· the PPE should only be used by persons who have been trained
in its use.
· PPE shall not be used by individuals with any health condition that may affect their safety during regular use or in an emergency.
· prepare an emergency response plan that can be implemented when needed.
· never attempt to modify the fall arrester without prior written consent from the manufacturer.
· any repair of the fall arrester shall only be carried out by its manufacturer or its authorised representative.
· the PPE shall not be used in any way other than its intended use.
· the PPE is a type of personal equipment and shall be operated by a single dedicated user only.
· before using the fall arrester, verify that all components of the gear which forms the fall arrest device interact correctly. Periodically inspect the joints and fitting of personal protective equipment to avoid accidental release or detachment.
· do not use PPE kits in which the performance of any component is inhibited by performance of any other component.
· before each use of personal protective equipment, it should be thoroughly inspected to check its condition
and correct functioning.
· during the visual inspection, verify all components of personal protective equipment with particular attention to all evidence of damage, excessive wear, corrosion, abrasion, cuts, or malfunctions. Special attention should be paid
in individual devices to:
· in the full body harness and belt for positioning buckles, adjusting devices, attachment points (buckles), webbing, seams, loops;
· in energy absorbers: tether loops, ropes, stitching, casing and connectors;
· textile fibre life ropes and anchor ropes: ropes, loops, thimbles, connectors, adjustment parts and knots;
· steel cable life ropes and anchor ropes: cables, cable wires, end clamps, thimbles, connectors and adjustment parts;
· rope/lanyard-operated retractable type fall arresters: proper performance of the winding and retarding gears, the casing, the shock absorber and the fasteners;
· guided type fall arresters: casing, proper running on the anchor rope, locking gear performance, rollers, bolts, rivets, connectors and the energy absorber;
· in the connectors (snap hooks) on the load-bearing body, riveting, main pawl, operation of the locking mechanism;
· at least once a year, every 12 months of operation, PPE requires removal from service for a thorough periodic inspection. The periodic inspection can be carried out by a person who is responsible at the workplace for periodic inspections of protective equipment and who has been trained to do so. Periodic inspections may also be carried out by the equipment manufacturer or a person or company authorised by the manufacturer. Carefully inspect all parts of the equipment paying particular attention to any damage, excessive wear, corrosion, abrasions, cuts and malfunctions (see previous section). In certain cases, if PPE has a complex design, like retractable type fall arresters, periodic inspections shall only be done out by the manufacturer or its authorised representative. Following the periodic inspection, the next periodic inspection date shall be identified.
· regular periodic inspections are critical to the condition of PPE and the safety of its user, which depends on uncompromised performance and durability of PPE.
· during the periodic inspection, check the legibility of all personal protective equipment markings and labels (which apply to the PPE unit in question).
· all information relating to the personal protective equipment (name, serial number, date of purchase and entry into service, user name, repair and maintenance information and decommissioning information) must be included in the device operation sheet. The facility where the equipment in question is used is responsible for the entries in the maintenance record. The record is filled in by the person responsible at the workplace for protective equipment. Do not use the PPE that does not have a completed usage record.
· if personal protective equipment is sold outside its country of origin, the personal protective equipment supplier shall provide it with the instructions for use and maintenance and the procedures of periodic inspection and repair in the official language of the country in which the personal protective equipment will be used.
· PPE must be taken out of service immediately if there is any doubt as to the condition of the equipment or its proper functioning. The equipment can be put back to service after thorough inspection by the equipment manufacturer and its written consent to the re-use of the equipment.
· PPE must be taken out of service and disposed of (permanently destroyed) if it has arrested a fall.
· full body harness is the only acceptable device for holding the body in personal protective equipment

against falls from a height.

· the fall protection device can be attached to the full body harness attachment points (buckles, loops) marked with a capital "A".

16. WARRANTY

The manufacturer grants 12 months of warranty from the date of purchase of the equipment. In the event of a defect in any part, the warranty period for that part shall be extended by the time of repair and effective rectification of the defect disclosed.

The guarantee covers: material defects, construction defects, defects in the corrosion protection coating.

Pursuant to EN 365, the anchor point is subject to periodic inspection at least every 12 months. The periodic inspection should be carried out by the manufacturer's authorised service centre or a person trained in the inspection of such equipment.

A trained person is someone who, based on their specialist training and certification,
has sufficient knowledge of the safety and rescue equipment installed
and is sufficiently familiar with the applicable health and safety regulations, guidelines and generally recognised technical rules to be able to assess the operational safety and correct application of the safety equipment.

Before each use of the device, check that the date of the next technical inspection has not passed. After this date, the device cannot be used. Before and after each use, a visual check should be performed to ensure that the device is complete and in good working order and that the wire rope is in good tension. If any defects or incompleteness are found, the device may not be used. Contact the manufacturer to resolve doubts and do not attempt repairs yourself! A device that has been involved in a fall arrest must be taken out of service immediately! A device that has been involved in a fall can only be recommissioned
after a detailed inspection by the manufacturer or a service centre authorised by the manufacturer. When using the device, special attention must be paid to dangerous phenomena affecting the operation of the PPE or safety of the user, in particular: looping and sliding of ropes on sharp edges, swinging falls, electricity, exposure to extreme temperatures, damage to the equipment, adverse effects of climatic factors, exposure to chemicals, pollution.

Original device components must not be modified, repaired or replaced with others.

Notified body of the EU type testing certificate issuer per Regulation (UE) 2016/425: Polish Ship Register (PRS) no. 1463)
al. Gen. Józefa Hallera 126 80-416 Gdańsk, Poland
Production control notified body:
Apave Exploitation France SAS (n°0082) - 6 Rue du Général Audran - 92412 COURBEVOIE cedex - France
Manufacturer: PROTEKT Grzegorz Łaszkiewicz Sp. z o.o. - Starorudzka 9 - 93-403 Łódź, Poland
tel.: +4842 6802083 – fax: +4842 6802093

S. USING A TRIPOD TO LIFT LOADS IN ACCORDANCE WITH THE MACHINERY DIRECTIVE 2006/42/EC

Permissible working load (WLL): 500kg
Minimum Breaking Force (MBS): 15kN.
Safety factor (SF): 3:1.

Description of the marking of the load lifting stand:
1. Book - read the instructions for use before use.
2. Load pictogram - use for lifting loads.
3. CE – CE marking in accordance with Directive 2006/42/EC.
4. WLL – Permissible Working Load.
5. MBS – Minimum Breaking Strength.

· Plan the lifting operation, determine the weight of the load and prepare the unloading area, ensuring it can take the load.

· The tripod must be visually inspected and mechanically inspected before use. Do not use the tripod if any material defects are detected.

· The operator must wear mandatory protective equipment during the entire operation (helmet, safety gloves and reflective vest). Use a safety harness if necessary.

· Only qualified operators may use the device. The operator should be trained in how to use the device.

· In addition to these operating instructions, the occupational health and safety regulations applicable in your workplace must be observed. Stricter regulations and rules should always be applied.

· The tripod is used to raise and lower loads with the maximum weight WLL indicated on the tripod label.· Never apply more force than the WLL force marked on the tripod label.

· When lifting loads, the device must not be used for the evacuation of persons.· Do not use the tripod for purposes other than its intended purpose.

· Do not lift loads above the surface occupied by people.

· Do not leave a suspended load unattended.

· Do not change the structure of the tripod, repair or replace any elements included in the set.

· Any modifications/repairs should be performed by qualified personnel.

· Before starting work, always check the connection between all connected parts (shackles, slings, cables, hooks, etc.).

· Check the stability of the load attached to the tripod.

· The center of gravity of the load should be directly under the tripod head in the area bounded by the tripod legs.

· The use of the tripod with other load-lifting devices must be in accordance with the instructions for use of these devices.

· It is prohibited to use sets in which the tripod interferes in any way with the operation of other elements.

· Avoid working in areas where the equipment may swing and strike an object or where lines may cross or intertwine with those of other equipment in the area.

· Accessories used with the tripod should be equipped with appropriate locks to avoid unintentional unlocking of the load.

· Observe the tripod carefully when it is loaded.

· Avoid sudden stops and jerks when using the tripod. Do not dynamically overload the tripod.

· Do not use the device in acidic and chemically aggressive environments.

· Use in the temperature range from -20 to +50.

· Do not use the tripod in difficult weather conditions (ice, snow, fog, strong wind, storm).

If you have any doubts about the condition and use of the tripod, please contact the device manufacturer..

OPERATION SHEET– It is the employer at the workplace where the equipment is used that is responsible for the entries in the operation sheet. The operation sheet should be completed before the equipment is first issued for use by the competent person responsible in the workplace for protective equipment. Information on factory periodic inspections, repairs and the reason for withdrawal of the equipment from use shall be posted by the competent person responsible at the workplace for periodic inspections of protective equipment. The service record should be kept for the entire service life of the equipment. Do not use personal protective equipment that does not have a completed operation sheet

MODEL AND TYPE OF EQUIPMENT	
SERIAL NUMBER	
PART NUMBER	
DATE OF MANUFACTURE	
DATE OF PURCHASE	
DATE OF ENTRY INTO SERVICE	
USERNAME	

PERIODIC INSPECTIONS AND SERVICING				
INSPECTION DATE	REASONS FOR REVIEW/REPAIR	DAMAGE FOUND, REPAIRS CARRIED OUT	NAME AND SIGNATURE OF THE RESPONSIBLE PERSON	DATE OF NEXT INSPECTI ON